HAILO AS Terzett 10/10/10/KS light grey

3666831

GTIN: 4007126366795

For hinged door cabinets from 400 mm width

SWING

3 BUCKET

30 L
TOTAL

Suitable for cabinet width (cm)
40, 45, 50, 60, 80, 90

- equipped with a dust-pan and a brush

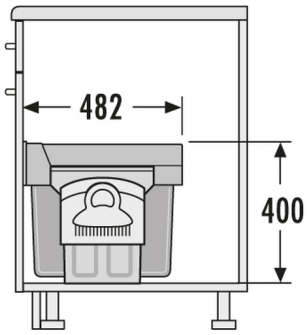

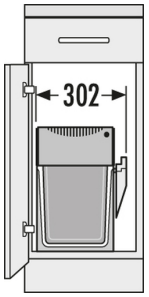

Specifications

Type of installation Swing	✔
Cabinet-width min. (cm)	40
Cabinet-width max. (cm)	90
Suitable for cabinet width (cm)	40, 45, 50, 60, 80, 90
available Cabinet-depth min. (mm)	482
Bottom-mounted	✔
Slides	Full extension
Product dimensions (WxDxH) (mm)	302 x 482 x 400
Packing dimensions (WxDxH) (mm)	260 x 504 x 420
Number of bins	3
Capacity (l)	3 x 10
Total volume (l)	30
Color metal parts	silver-coloured
Color plastic parts	light-grey

Copyright © 2024 Hailo. Alle Rechte vorbehalten.

Weight incl. packing (kg)	7,8

Copyright © 2024 Hailo. Alle Rechte vorbehalten.