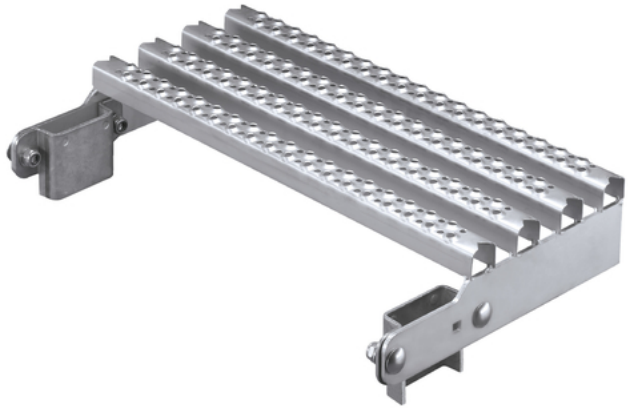

Exit extensions for ladder rail 40x20mm

6007691

GTIN: 4007126600783

The exit extension provides for a safe crossing from the top rung onto the exit area.

Material
hot galvanised steel 1.0037 / ASTM A36

Wall distance in mm
155 - 225

- Quick assembly
- Safe passage

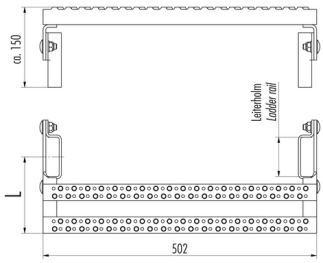

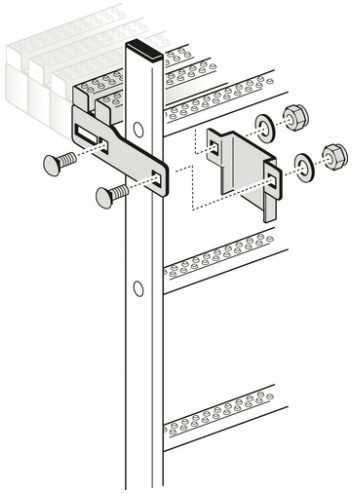

Specifications

Rail dimension	40x20 mm
Material	hot galvanised steel 1.0037 / ASTM A36
Wall distance in mm	155 - 225

Copyright © 2024 Hailo. Alle Rechte vorbehalten.